# ⚠ IMPORTANT

## READ BEFORE YOU BEGIN INSTALLATION

**IT IS CRITICAL FOR YOUR SAFETY THAT YOU CAREFULLY READ AND FOLLOW THE SAFETY CAUTIONS AND INSTALLATION INSTRUCTIONS BOTH PRIOR TO AND DURING INSTALLATION.**

### USER SAFETY CAUTION

During installation, be mindful of the potential for sharp edges on the product or vehicle. Taking proper safety precautions helps ensure a safe and smooth installation process.

**Always wear protective gloves and handle components with care to reduce the risk of injury.**

### TEMPERATURE SURFACE CAUTION

During high temperatures or extended sun exposure, surfaces of this product may become hot to the touch, posing a risk of burns or injury. Use caution when handling the product in hot weather and allow time for it to cool before contact.

**Always check surface temperature before use to ensure safe handling conditions.**

### FASTENER TORQUE CAUTION

All fasteners must be tightened to the specified torque values provided in the installation instructions to ensure proper fit and safe operation of the tonneau cover. Under- or over-tightening can lead to product failure, potential damage to your vehicle, injury, or safety hazards while driving.

**Always use a calibrated torque wrench and follow the specifications in the installation instructions.**

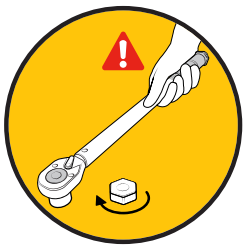

### PINCH POINT SAFETY CAUTION

This tonneau cover may create pinch points when closing or operating near solid surfaces such as the truck bed rails or tailgate. To prevent injury, keep hands, fingers, and other body parts clear of moving parts during operation.

**Always operate the cover slowly and with caution to ensure safe and proper use.**

### ENTRAPMENT SAFETY WARNING

This tonneau cover does not feature a manual release mechanism from inside the truck bed. To prevent the risk of entrapment, never allow anyone to be inside the bed of the truck when the cover is closed.

**Always ensure the area is clear before closing the cover, and keep the cover securely latched when not in use to avoid accidental closure.**

### COVER ATTACHMENT WARNING

A partially rolled up or unsecured cover may detach during transit, risking vehicle or property damage and personal injury.

**Always verify the tonneau cover is properly secured before operating the vehicle.**

### CARGO TRANSPORT WARNING

When transporting cargo that is taller than the truck bed, the cover must be fully rolled open and securely fastened with both retainer straps. An unsecured cover can detach while driving, risking vehicle or property damage and personal injury.

**Never operate the vehicle with a partially rolled up cover.**

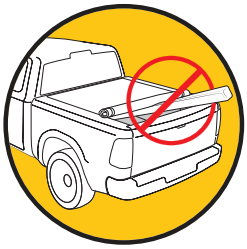

### COVER POSITION WARNING

Before operating the vehicle, always verify the tonneau cover is either fully rolled open and secured with both retainer straps or fully rolled closed and securely latched down.

**Never operate the vehicle if the tonneau cover is not properly secured.**

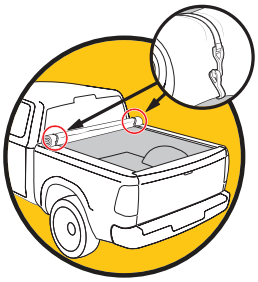

TOYOTA TACOMA 24+

**LO PRO**

# INSTALLATION SHEET

**Any damaged or missing parts?**

Parts will be shipped to you directly

Call 877-878-9336, Mon - Fri, 8:00 a.m. - 5:00 p.m. CT

**NOTE:** It is important that all the areas where the bed cover mounts to the truck are clean and free of debris before installation.

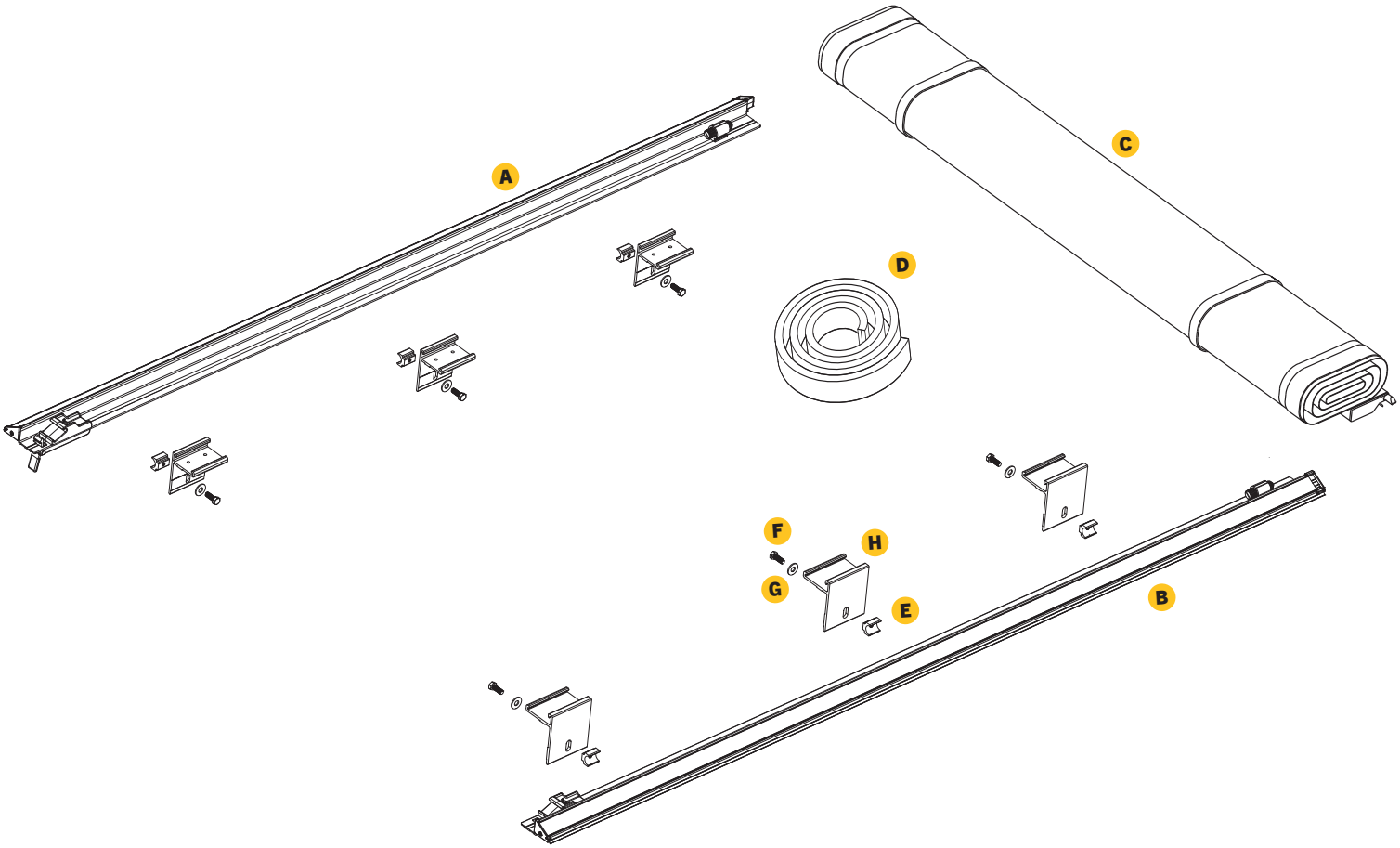


## PARTS INCLUDED IN YOUR KIT:

- **A** 1x Driver side rail
- **B** 1x Passenger side rail
- **C** 1x Roll cover
- **D** 1x Bulkhead seal

## PARTS INCLUDED IN HARDWARE:

- **E** 6x Anchor block
- **F** 6x Screw 5/16-18 x 7/8"
- **G** 6x Washer, 5/16"
- **H** 6x Rail attachment bracket
- **I** 12x Set screw 1/4"
- **J** 2x Corner support block weather seal

## TOOLS REQUIRED

- Flat head screwdriver
- 1/2” Wrench or socket
- 3/8" Ratchet drive

## TOOLS PROVIDED

- 1/8" Allen hex head wrench

## TOOLS RECOMMENDED

- Isopropyl alcohol
- Scissors/utility knife

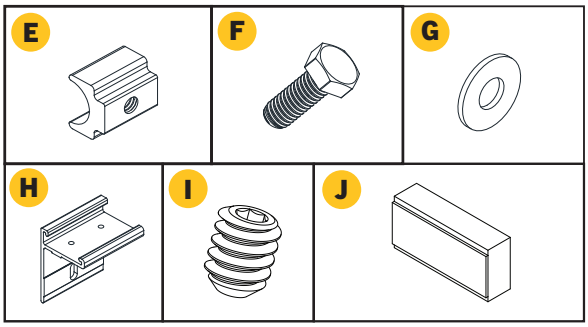


 ©RealTruck Group, Inc., 2026

Part# 1119114 Rev. B 9-8-26

**1** The serial number for the cover is located here.

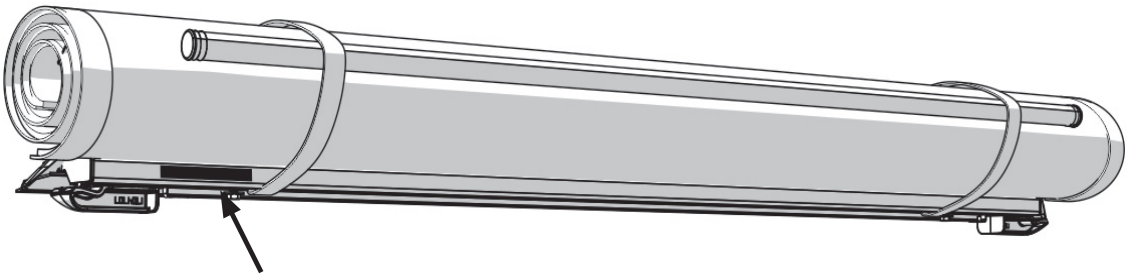

For future reference, write it here:

_____

**2** **Install the bulkhead weather seal (D) to the truck's front bulkhead:** Clean the area where the seal will go with soap and water to remove dirt and debris. Then clean the area with isopropyl alcohol to remove wax or grease and to evaporate any remaining water, allow the surface to dry. Then position the seal and apply pressure to the entire seal to make sure the adhesion is good.
**Install corner support block seals (J):** Peel off the protective layer to expose the adhesive surface of the weather seal. Apply the corner support block seals to the front corners of the truck bed. Position them carefully into the front corners of the truck bed, right under the bulkhead seal. Ensure that they are aligned properly and positioned where the bulkhead seal lacks support from the cargo rail. Do this at both front corners of the truck box.

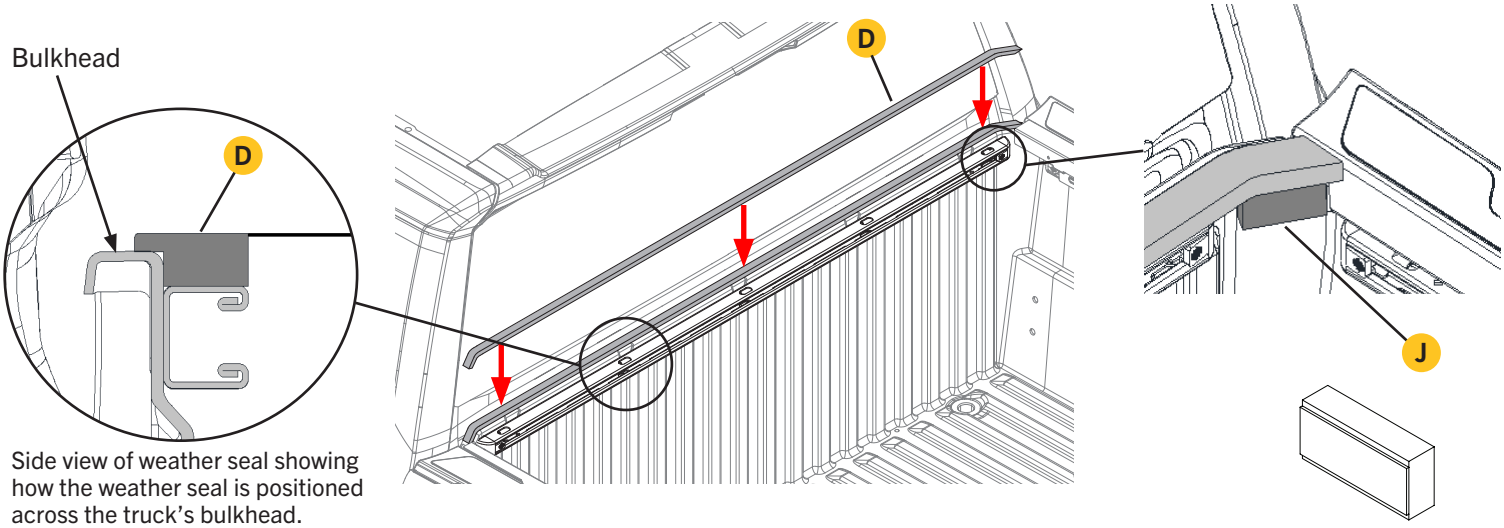


Side view of weather seal showing how the weather seal is positioned across the truck's bulkhead.

**3** Remove cargo rail end plugs: Begin by pushing in on the end plug tab and at the same time push the end plug out of the rail.

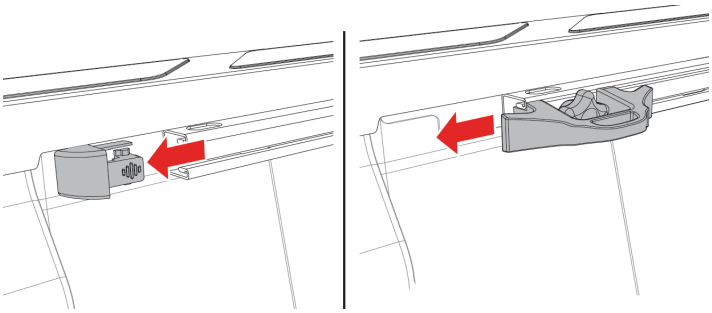

**4** Install 3 anchor blocks (E) into the accessory rail from the tailgate end. Then put the end cap back into the tailgate end of the accessory rail. Repeat installation for drive side.

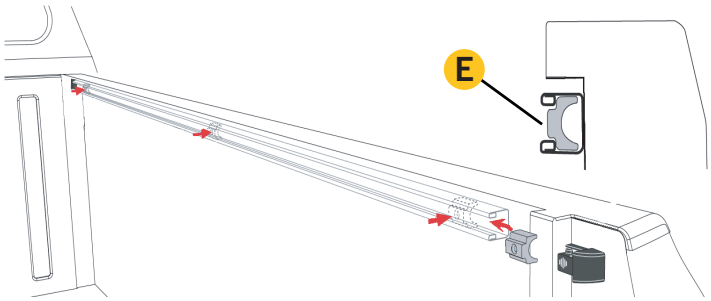

## 5

**Install set screws (I) to rail brackets (H):** Ensure you have the set screws (I), rail brackets (H), and Allen hex wrench required for installation.

**Identify components:** Confirm that you have the correct set screws and rail brackets. Each rail bracket should have two holes for inserting the set screws.

**Insert set screws:** Take the set screws (I) and insert them into both holes of each bracket (H) as shown in the provided image below. Be sure to place one set screw in each hole of the bracket.Use Allen hex wrench tool to assist with inserting screws.

**Leave set screws loose:** As instructed, leave the set screws loose at this time. Do not tighten them fully yet, as you may need to make adjustments later in the installation process.

**Repeat for each bracket:** Repeat the process of inserting set screws into both holes of each bracket until all brackets are equipped with set screws.

**Verify installation:** After inserting the set screws into the brackets, double-check to ensure that each set screw is properly seated in its respective hole and that they are all loose enough so the brackets can slide front to rear within the side rail.

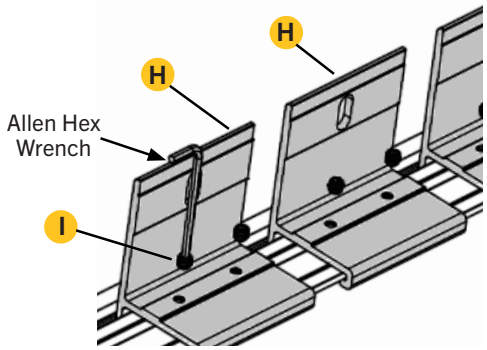


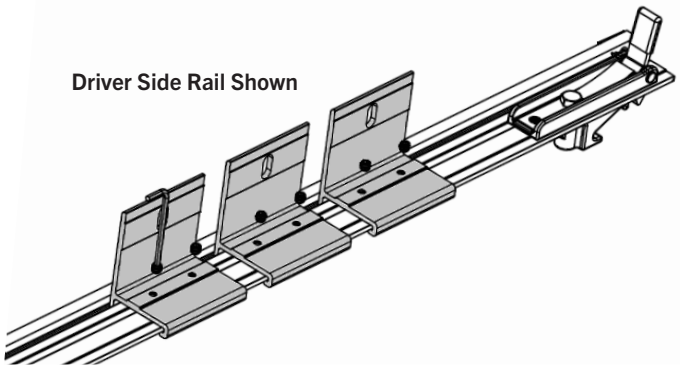


## 6

**Place assembled rails on bed caps:** Start by placing the assembled rails on top of the bed caps of the truck, ensuring that the fin seal is positioned on top. The fin seal helps to provide a secure fit and prevent water or debris from entering the truck bed.

**Position brackets fore and aft:** Inside each rail, position the brackets so there is one bracket at the front, one in the middle, and one at the rear of the cargo rail. Ensure that the brackets are aligned evenly along the length of the rail for optimal support.

**Align anchor blocks:** Check the positioning of the anchor blocks (E) that were previously installed in the cargo rail. Align these anchor blocks with the rail brackets that you have just positioned. Proper alignment ensures that the rail system attaches securely.

**Fasten rail Brackets to anchor blocks:** Use fastener (F) and washers (G) to fasten the rail brackets (H) securely to the anchor blocks (E). Insert the fasteners through the brackets and into the anchor blocks, ensuring a tight fit with the washers. This step ensures that the brackets are firmly attached to the trucks cargo rail.

**Position assembled side rails from the closed tailgate:** With the truck's tailgate closed, position the end of each rail approximately 1/2" away from the rear corner of the truck bed. This positioning helps ensure proper alignment of the rail system and allows for clearance when opening and closing the tailgate.

**Repeat for passenger rail:** Repeat the entire process to install the passenger rail on the opposite side of the truck bed. Follow the same steps to position brackets, align anchor blocks, fasten rail brackets, and position the end of the rail.

**Double-check alignment and tightness:** Once both rails are installed, double-check the alignment of the brackets, anchor blocks, and end positioning of the rails. Ensure that all fasteners are tightened securely and that the rails are properly aligned. This step helps to ensure the stability and functionality of the installed rail system.

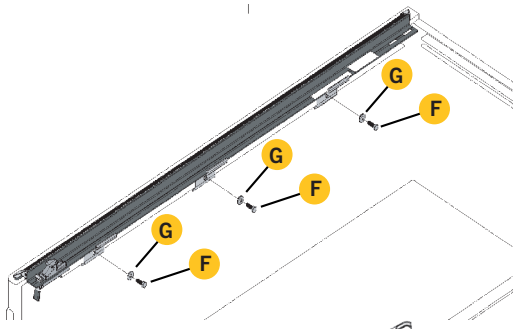


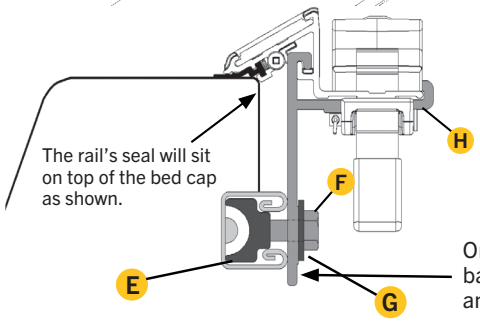


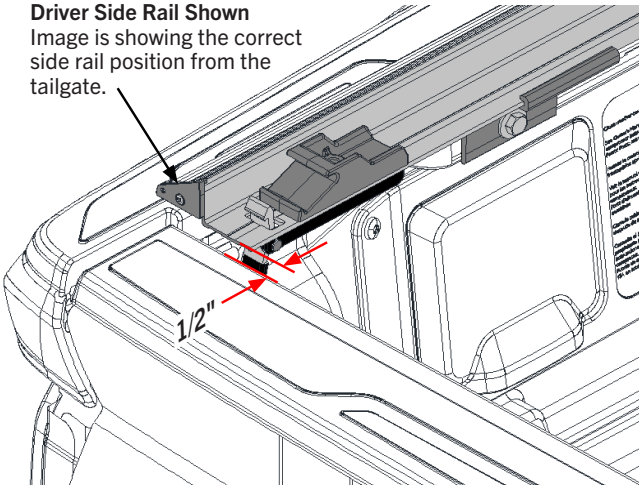


Once the rail is positioned from front to back apply downward pressure on the rail and tighten fasteners (F).

**Torque Requirement: 8ft-lbs. (11 Nm)**

**7** The sets screws (I) can now be tightened into to the bottom side of the rail as shown below. Use the Allen hex wrench that has been supplied in the hardware bag to complete this step.
Do this for each bracket.

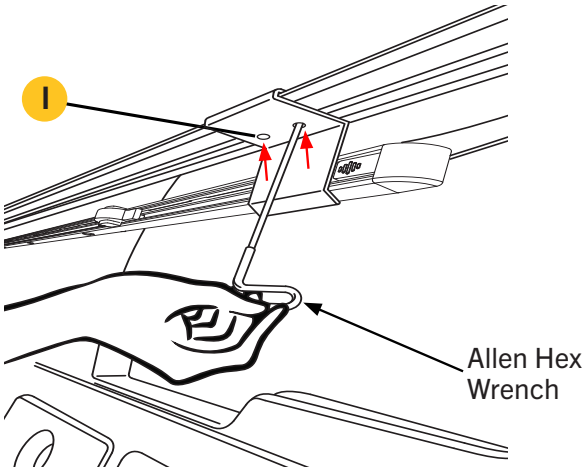


**8** Place the cover (C) on the side rails towards the front of the truck bed (near the cab). The front header seal is designed to help shed water and should be sitting on top of the bulkhead.

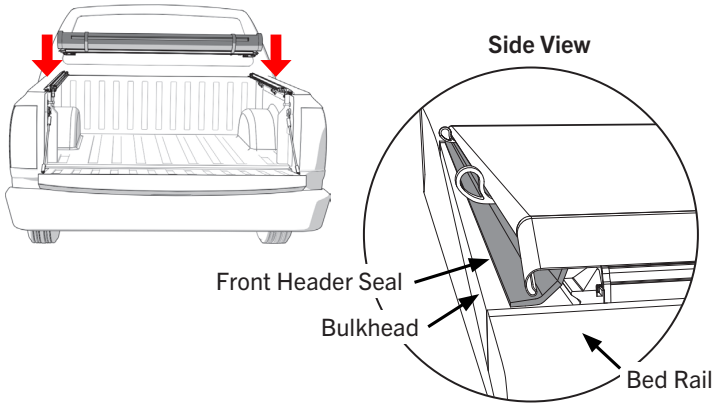


**9** To connect the cover assembly (C) to the side rails (A and B), slide the right and left header guides into the locked position. A clicking sound will indicate a secure attachment.

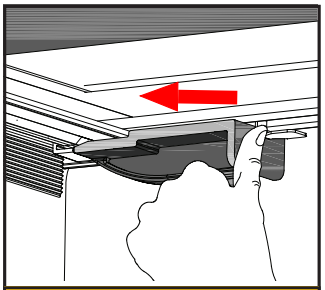

LEFT HEADER GUIDE

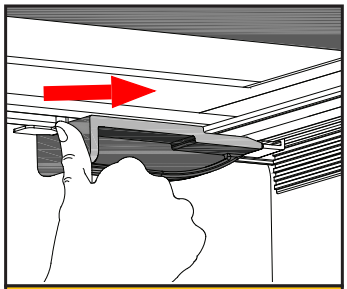

RIGHT HEADER GUIDE

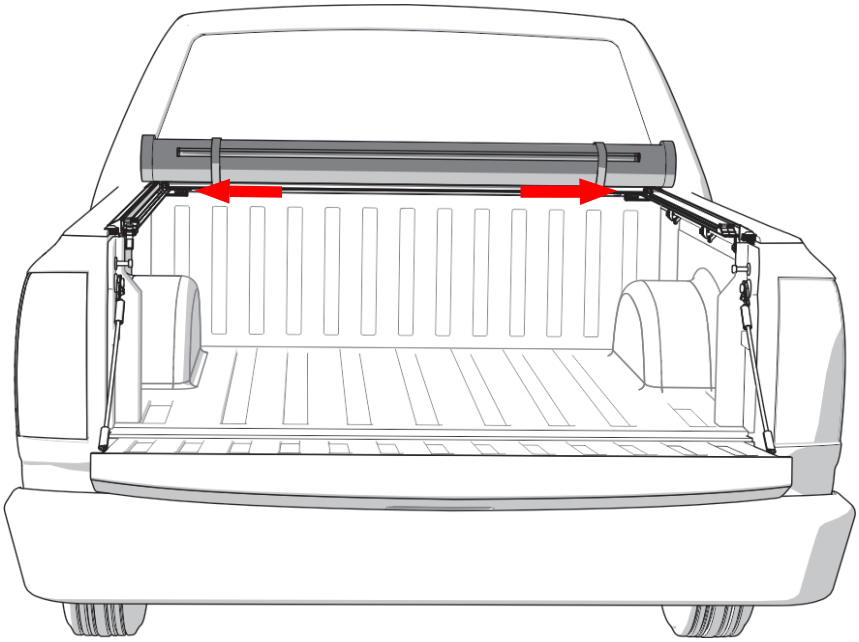

**10** To drive with the cover in the closed position, disengage the retainer hooks from the retainer loops and unroll the cover towards the tailgate.

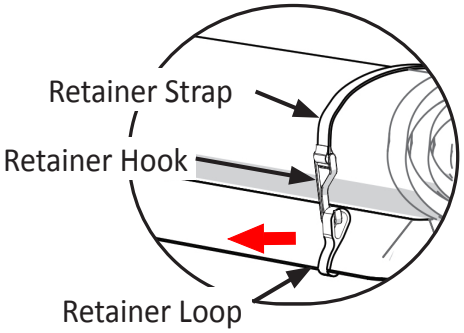


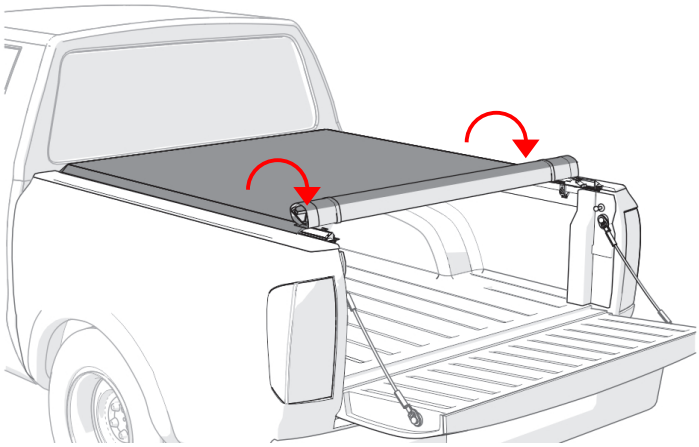

**11** Place the rear header into the header stops which are located on both side rails. Rotate the rear header downwards until you feel the cover latch in place. A clicking sound will indicate a correctly installed cover.

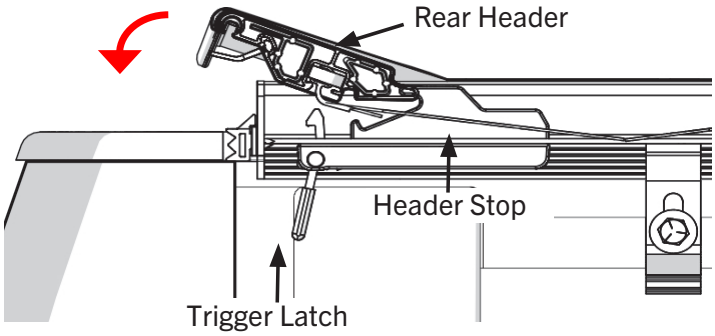


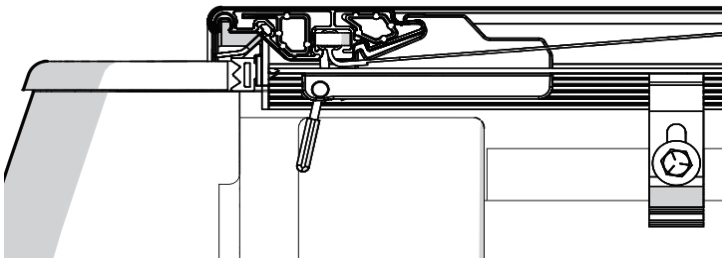

**Preferred method of closure:** Close tailgate, then close cover on top of the tailgate. This method will not work with some truck applications. Use the alternative method instead.

**Alternative method of closure:** Close and latch the cover, then close the tailgate with the seal inside the tailgate. It will take a little time to train the seal to close on the inside.

**12** Once the cover is closed, grab the fabric flap and evenly pull it over the hook track engaging the loop to the hook.

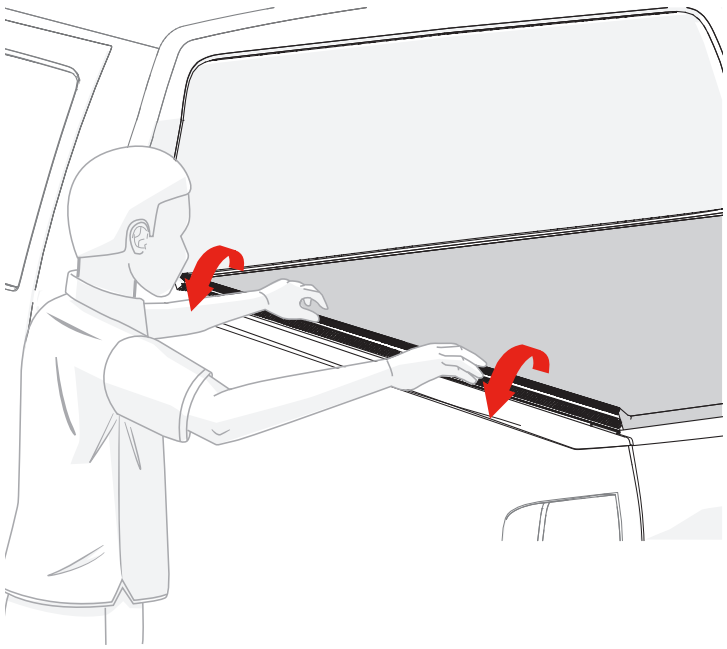

**13** With both sides of the hook and loop engaged, use the palms of your hand to firmly push the loop strip into the hook track. Do this to both driver and passenger sides. **You are ready to drive with the cover in the closed position.**

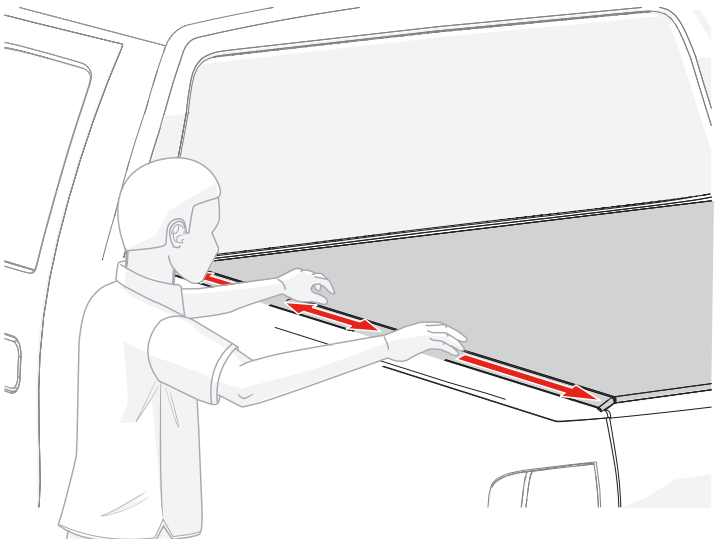

**HOOK AND LOOP MUST ALWAYS BE ADJUSTED AFTER ROLLING COVER CLOSED!**

## OPENING THE COVER

To drive with the cover in the open position, pull the latch towards you to release the cover (located on driver side rail). Roll the cover toward the cab of the truck, making sure that both sides roll evenly. Secure the cover by placing both retainer hooks into the retainer loops. **You are ready to drive with the cover in the open position.**

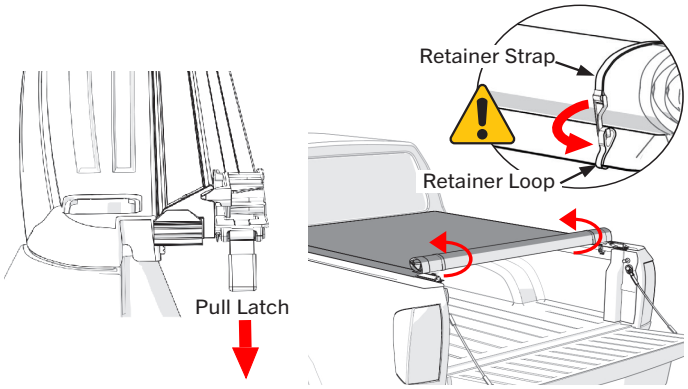


## REMOVING THE COVER

To remove the cover from the side rails, push up on the retainer tab and then slide the header guide away from the side rail.
Do this on both the driver and passenger side. Carefully lift the cover off the side rails.

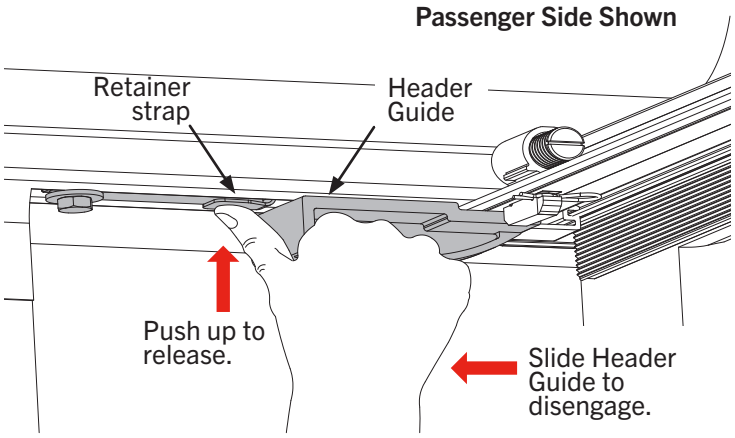


## AUTOMATIC TENSION CONTROL ADJUSTMENT

ProX15 is equipped with Automatic Tension Control. This helps compensate for material expansion and contraction caused by extreme temperature changes. Proper tension allows the cover to look and perform at its best. While preset at the factory, you can check cover tension after installation as well as seasonally.

If the cover feels too tight or too loose when opening or closing it, adjust the tension during the warmest part of the day. With the cover closed, release the hook and loop fastener from both side rails near the cab. Check compression of both spring plungers against the front header per Detail C. Roll the cover open and make adjustments. Repeat until satisfactory tension has been achieved.

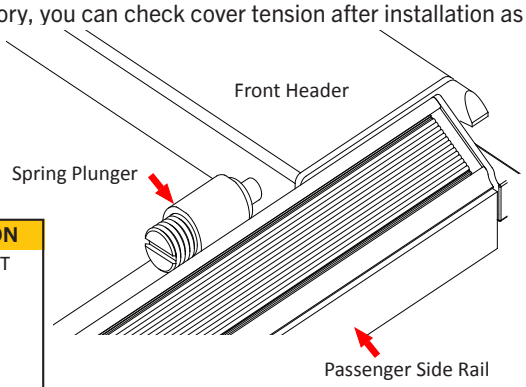


**DETAIL C**

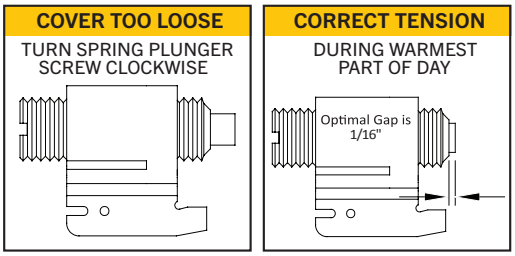

# LIMITED LIFETIME WARRANTY

## WARRANTY COVERAGE

This truck bed cover is warrantied against defects in materials or workmanship as follows. This warranty is void if the product has been damaged in an accident, or due to neglect, unforeseeable use, improper installation, improper servicing, or other cause not arising out of defects in material or workmanship.

### LIMITED LIFETIME WARRANTY ON HARD PARTS

All hardware included with your truck bed cover, including rails, clamps and bows carry a limited warranty for five (5) years from the original date of purchase, subject to the terms below.

### LIMITED LIFETIME WARRANTY ON THE FABRIC

The fabric on your truck bed cover carries a limited lifetime warranty, subject to the terms below.

## WARRANTY IS NOT TRANSFERABLE

The warranty is to the initial consumer purchasing the truck bed cover and it is not transferrable to a subsequent end user. Proof of purchase may be required to enforce these warranty rights.

## WARRANTY CONDITIONS

Failure to follow these warnings and care instructions will void the warranty:

- Clean with mild automotive soap and water only.
- Do not use conditioners that contain silicone or petroleum.
- The tonneau cover must be secured at all points when the vehicle is in motion. When not fully closed with the rear latch engaged the cover must be completely rolled up and secured at the cab with both provided retainer straps attached. Do NOT drive with the bed cover in a partially open position.
- Cargo should not contact the tarp at any point. Protrusions in the tarp will stress the vinyl fabric. Cargo may also shift while traveling causing it to press against the vinyl fabric and damage it.
- Check rail clamps for tightness after a week of driving following the installation of the cover and periodically thereafter.
- Do NOT roll the cover into the rear cab window. Do NOT stow the cover against the cab of the truck.
- If the cover is going to be rolled open for an extended amount of time, periodically re-roll the cover and secure the retainer straps to ensure the cover doesn't rest against the cab of the truck.
- Before opening, the cover must be free of all foreign materials including snow and ice.
- Do NOT tow your vehicle from the rear with the cover on your vehicle. If towing from the rear is required, the cover MUST be removed from the vehicle and properly stored.

## WARRANTY PERFORMANCE

If all warranty conditions are met, a defective truck bed cover, tarp, or hardware component will either be repaired or replaced (at our option). We reserve the right, for any warranty, to substitute a newer model of bed cover having similar form and function, to offer a warranty discount on an entire replacement system, and/or provide remedies other than those mentioned in this document.

## WARRANTY PROCESS

A Return Material Authorization number must be obtained from our Customer Service Department prior to returning any product. We may require the original item to be returned postage prepaid for final determination. Shipping charges will apply for any repair or replacement. Other than postage or shipping charges, no charge will be made for repair or replacement under this warranty.

This warranty gives you specific legal rights. As a consumer, you may also have additional rights and remedies under the laws of your state.

## SAFETY INSTRUCTIONS

- DO NOT place objects on or against cover or framework.
- DO NOT tie cargo to truck bed cover framework.
- DO NOT attempt to drive with the cover in the partially open position.
- DO NOT operate vehicle with objects on top of the cover.
- NEVER allow children or pets to occupy pickup box while cover is closed.
- Cover is not airtight. Special care is required to keep cargo clean and dry.
- Tonneau covers won't prevent theft of contents inside truck box.
- The cover assembly (tarp) must be rolled fully open and secured with retainer straps when towing vehicle backwards.
- If the cover is going to be rolled open for an extended amount of time, periodically re-roll the cover and secure the retainer straps to ensure the cover doesn't rest against the cab of the truck.
- A fully rolled cover in the open position must always be secured with retainer straps.

## TROUBLESHOOTING TIPS

### WHY IS MY COVER HOLDING WATER AFTER IT RAINS?

- Water pooling on the cover is normal because our cross bows are not arched. Since they are designed to sit flat some water may accumulate on the top of the cover. Once you drive your truck, the water will shed from the cover. Make sure to retighten the hook and loop fasteners along the length of the bed.

### WRINKLES ON THE VINYL FABRIC AFTER ROLLING COVER CLOSED

- Pull the vinyl fabric taut from each side. For best results, the help of a second person pulling on the opposite side is preferable.

### SAGGING VINYL FABRIC BETWEEN THE CROSS BOWS

- Adjustment to tension blocks may be required.

### WIND LIFTS UP THE EDGE OF THE VINYL FABRIC

- Make sure to engage the hook and loop on the driver and passenger side rails after closing the cover. This may need to be done periodically when taking long trips.

### VINYL FABRIC FLUTTERS EXCESSIVELY WHEN DRIVING

- Adjustment to tension blocks may be required.
- Make sure hook and loop fasteners are set. See Step 12-13.

### SNOW AND ICE ACCUMULATION ON THE VINYL FABRIC

- Use broom or brush to remove loose snow and ice. DO NOT use sharp or pointed tools to remove snow and ice.
- Direct sunlight will help melt snow and ice off the vinyl fabric.

### TONNEAU COVER WILL NOT LATCH

- Check side rails to make sure they are level. See Step 6.
- Make sure the header seal is not caught between side rails & header.
- Check the position of side rails on the pickup box. They may be positioned too low. See Step 6.
- Make sure the cover has proper tension. See fine tuning tension blocks section.

### VINYL FABRIC IS TOO TIGHT OR TOO LOOSE

- Adjustment to tension blocks may be required.

### VINYL FABRIC HAS SHIFTED TOO FAR TO ONE SIDE

- Unlatch the cover at the tailgate, release the hook and loop along both sides, go to the shorter side of the tarp and tug. The vinyl fabric will slide in the aluminum headers. Pull on the shorter side until the tarp appears centered on the whole system. Latch the cover and secure the hook and loop down both sides. Repeat if more adjustment is needed.

## COVER CARE AND MAINTENANCE

- Clean with mild automotive soap and water. Never use vinyl conditioners that contain silicon, petroleum, or citrus based products on your truck bed cover as they may crack and shrink the vinyl top surface.

## FAQ

### WHY IS THERE A HOLE PUNCHED AT THE REAR OF THE PASSENGER SIDE RAIL OF THE TRUXEDO LO PRO, DEUCE AND PRO X15 BUT NO LATCH?

All side rails are punched identically to keep them uniform, to ensure manufacturing efficiency and to reduce tooling costs.

By doing this, TruXedo can build and ship more covers while maintaining competitively priced products of the highest quality.

### WHY IS MY COVER HOLDING WATER AFTER IT RAINS?

Water pooling on the cover is normal because our cross bows are not arched. Since they are designed to sit flat some water may accumulate on the top of the cover. Once you drive your truck, the water will shed from the cover. Make sure to retighten the hook and loop fasteners along the length of the bed.

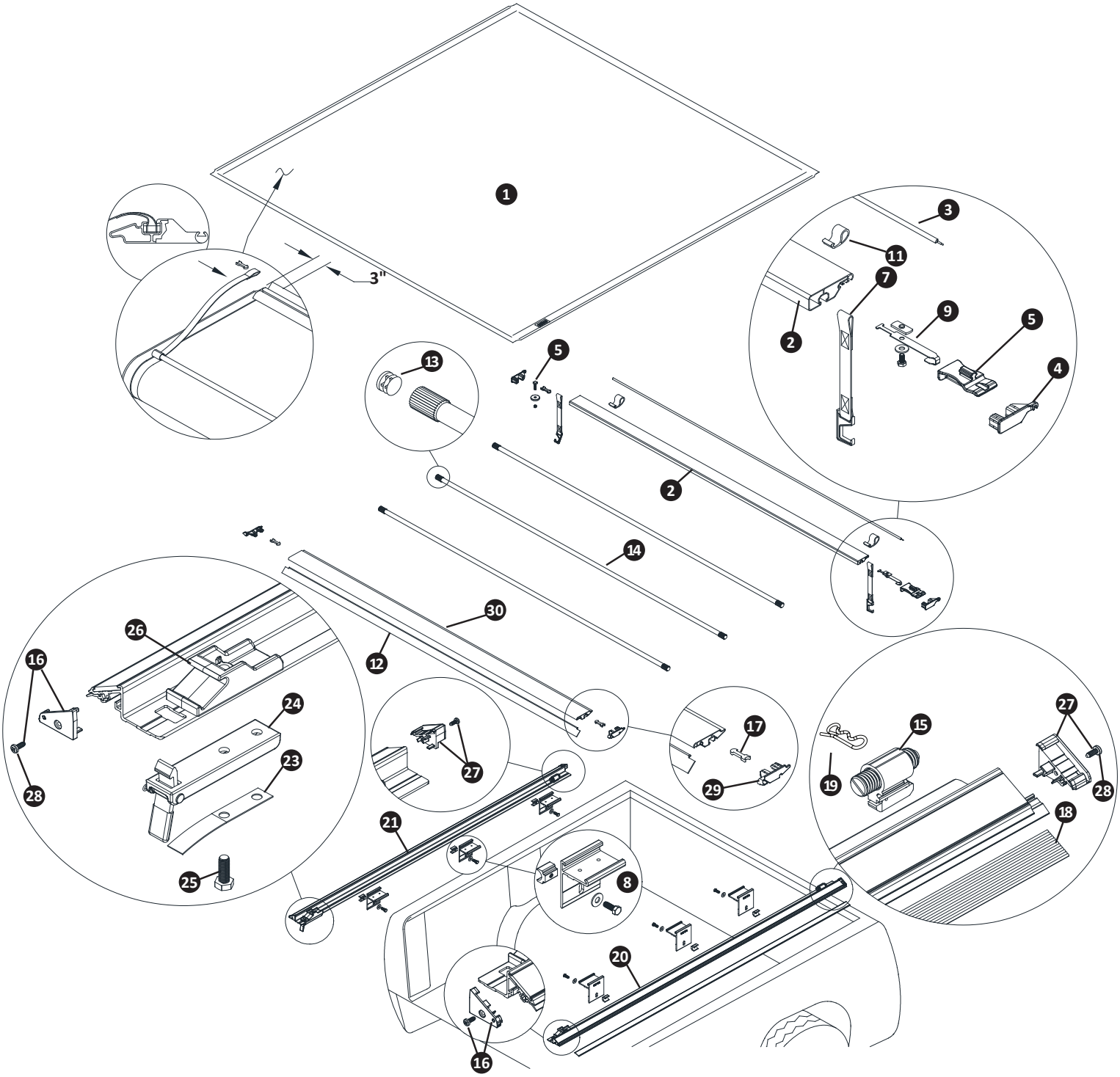


## Replacement Parts

| | | |
|---|---|---|
| 1 | ____*____ | Replacement Cover |
| 2 | ____*____ | Black Front Header |
| 4 | 1118915 | Front Header End Plugs (Set of two) |
| 5 | 1704707 | Header Guide |
| 6 | ____*____ | * |
| 7 | ____*____ | Retainer Strap |
| 8 | 1119129 | Clamp Bracket Replacement (1) |
| 9 | 1117594 | Header Guide Retainer Assy |
| 10 | 1705192 | Extruded Retainer Loop |
| 11 | 1705192 | Extruded Retainer Loop |
| 12 | 1118404 | Header Seal Rear |
| 14 | ____*____ | Black Bow |
| 15 | 1115356 | Tension Control |
| 16 | 1118987 | Rear Side Rail End Plugs (Set of Two) |
| 17 | 1115354 | Header Insert Retainer Clip |
| 18 | 1115174 | Hook Fastener Strips |
| 19 | 1707003 | Hitch Pin |
| 20 | ____*____ | Side Rrail, Passenger's Side |
| 21 | ____*____ | Side Rail, Driver's Side |
| 22 | 1705727 | Flat Spring, 5/8" x 3 7/8" |
| 24 | 1704213 | Latch Assembled |
| 25 | 1702926 | Cap Screw, 5/16" x 7/8" |
| 26 | 1704187 | Header Stop |
| 27 | 1118950 | Front Side Rail End Plugs (Set of Two) |
| 28 | 1706547 | Square Head Screw (#1 Drive) |
| 29 | 1117467 | Rear Header 08 End Plugs (Set of Two) |
| 30 | ____*____ | Black Rear Header |

***Please specify length or make and model of vehicle.**